About this user manual:

Thank you for your purchase and use of the SMTP01 SocialMatic Android Camera system! Please read this user guide carefully before using the product and keep it handy for future reference!

As our company is committed to a continual improvement process, some features and functionality may change from that which is presented here without prior notice. This includes both hardware and software product specifications. Products may also differ slightly by geographical locations and as a result of specific retailer requirements.

The illustrations in this manual are examples only and may differ from those on your camera. The manufacturer assumes no responsibility for inaccuracies in this manual.

Items marked as "☆" are intended to highlight safe and optimum operations of the SMTP01 unit

1 Summary 3
1.1 Purpose 3
1.2 Model Number 3
1.3 Unit Operation & Storage Conditions 3
1.4 Technical Characteristics.....3
2 Technical Parameters 4
2.1 Hardware Specifications.....4
3 Function Specification.....5
3.1 Getting to Know Your Camera 5
3.2 Power Button Use.....8
3.3 Touch Screen Navigation.....8
3.4 U-Disk / USB Flash Drive.....8
3.5 Using the MICRO-SD card 8
3.6 Getting Started.....9
3.7 Desktop.....10
3.8 Screen Lock 10
3.9 Pre-loaded Applications.....10
3.10 Status and Notifications.....12
3.11 Application Management 12
3.12 Clock 13
3.13 Internet Browser 14
3.14 Calendar.....14
3.15 Camera.....14

3.16 Photo Capture Button 15
3.17 Calculator 15
3.18 Recording 15
3.19 EMAIL 16
3.20 File browser 17
3.21 Gallery 18
3.22 Screen Capture.....19
3.23 Wi-Fi.....19
3.24 GPS.....19
3.25 Settings 19
3.26 System Reset 21
3.27 SocialMatic Apk 21
Frequently asked questions: 23
Battery management.....23
Important Safety Precautions 24
Cleaning your device.....25

1 Summary

1.1 Purpose

The SMTP01 Android Camera system utilizes the latest ARM A9 processor, integrated ZINK imaging technology and the latest Android 4.4.2 operating system to provide real time instant digital printing and/or social media sharing of images captured by the camera. The device's GPS functionality allows the user to "tag" the location where image capture occurred.

1.2 Model Number

SMTP01

1.3 Unit Operation & Storage Conditions

Operational conditions:

Image capture & Thermal printing should be conducted between 5°C ~ 45°C @ 20-75%RH

Storage conditions:

The unit may be safely stored from -10℃ ~ +70℃ @ 10-85% RH. The unit should be allowed to return to normal operating conditions for one hour before use

1.4 Technical Characteristics

Device component overview

1) 1.5 GHz dual-core CPU
2) Mali400 GPU provides smooth 1080P video capability
3) 4.5 inch screen WVGA with 480 * 854 resolution
4) Printing function: print photographs immediately after capture
5) GPS chip functionality integrated with software to provide accurate Geo location of image capture
6) Wi-Fi: support wireless network function
7) Accelerometer functionality allows correct screen display with rotation of the device

2 Technical Parameters

2.1 Hardware Specifications

Parts	Parameter	Support	Remark
Platform			
CPU	Dual-core ARM CORTEX-A9 （1.5GHz）	Y	
Graphics	MALI 400	Y	
Screen	4.5”, 480×854, 160K	Y	
Touch Panel	Capacitive Touch Screen	Y	Single Point + Gesture
Memory/ RAM	1GB	Y	
Memory/ ROM	4GB	Y	
Storage	Micro SD	Y	Support up to 32GB
Network			
Wi-Fi	802.11b/g/n	Y	
Blue tooth	V2.0	Y	
Internal GPS			
Interface			
USB	Micro-USB2.0 (5Pin)	Y	Support OTG
Battery Charging	DC	Y	
Storage Interface	Micro SD	Y	Support 32G
Camera			
Host Camera	13.0MP，Auto-focusing	Y	
Front Camera	2.0MP，Fixed focus	Y	
Battery			
Capacity	1800mA/7.4V	Y	
Sensor			
Acceleration Sensor	Support	Y	Auto Switch

3 Function Specification

3.1 Getting to Know Your Camera

1) Power Switch
2) Reset Button
3) LED
4) SUB LCD
5) Micro SD Card Slot
6) DC Power Adapter Jack
7) USB Jack
8) Speaker
9) Microphone
10) Front (primary) Camera
11) Flash
12) Shutter Button

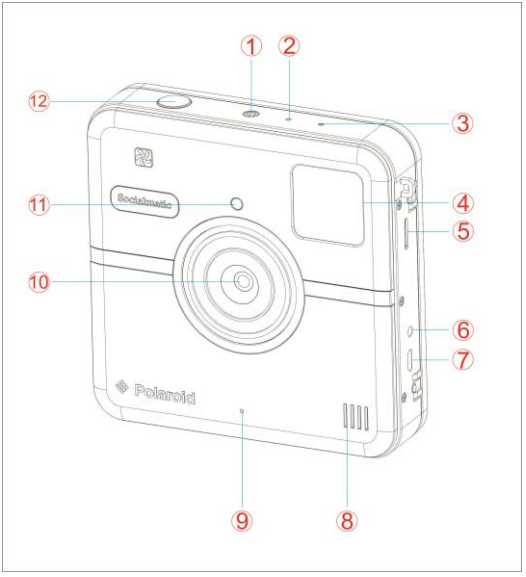

13) Rear Camera
14) Media tray door open switch
15) Printed image exit slot
16) Primary LCD

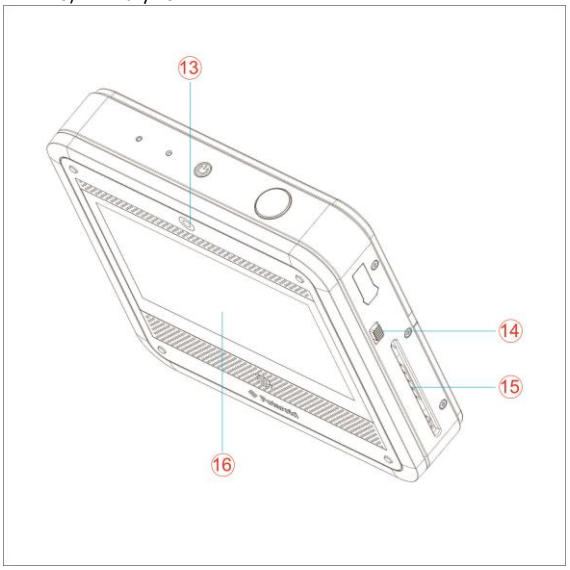

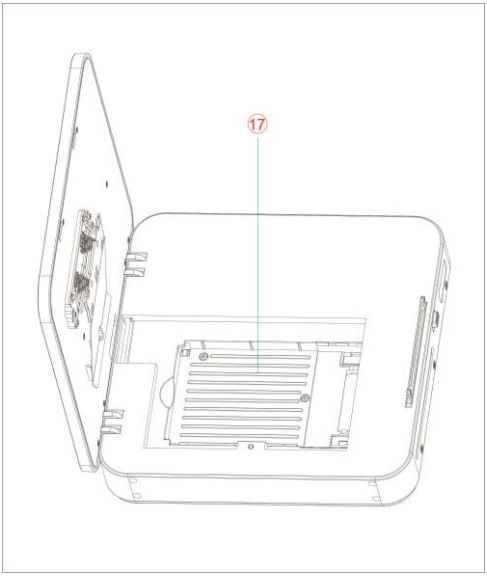

17) Media tray

3.2 Power Button Use

Turn On: Press and hold for 2 seconds.

Turn Off: Press and hold for 2 seconds ⇔ tap Power off ⇔ tap OK

Reboot: Press and hold for 2 seconds ⇔ tap restart ⇔ tap OK

Airplane mode: Press and hold for 2 seconds ⇔ tap Airplane mode

Sound mode: Press and hold for 2 seconds then select ***Sound***, ***Vibrate*** or ***Silent***

3.3 Touch Screen Navigation

The touch-screen allows for quick, easy and convenient navigation for all applications

Refer to the following methods for operation of the touch screen:

Tap: Quick tap & release on an item on the screen.

Touch & hold: Touch & hold for approximately 2 seconds, then release to display options window

Finger slide: Touch & slide your finger across the screen and then release

Two points to zoom in or out: Press and hold any two points on the screen – separate to zoom in or pinch to zoom out

3.4 U-Disk / USB Flash Drive

Insert U-Disk or USB Flash Drive

Insert your U-disk or USB Flash Drive into the device via USB host transfer cable. When ready for use, enter into the file browser and switch to the USB folder to view its contents

Remove U-Disk / USB Flash Drive

Close all applications or documents which have been opened on the U-disk / USB Drive. **Tap** → **Settings** → **Storage** → **USB storage** → **Unmount the storage device**. When "Mount this device" is displayed, it is safe to unplug the U-disk / USB Drive

☆ Do not repeatedly insert and remove the U-disc rapidly as it will damage the U-Disk

3.5 Using the MICRO-SD card

☆ The device supports up to a maximum 32GB micro SD card

Insert Micro-SD Card: Insert your card into the micro SD slot until it clicks into place

Remove micro SD Card: Close all applications or documents which have been opened on the card. **Tap** → **Settings** → **Storage** →**SD card** → **Unmount the storage device.** When "Mount this device" is displayed, press the card lightly and remove.

☆ Do not insert and remove the micro SD repeatedly as this may damage the card.
☆ We recommend using major brands of memory cards to avoid incompatibility issues
☆ We recommend using CLASS 8 or above memory card to get faster transfer speed

3.6 Getting Started

Charge the device

☆ It is not recommended to use the device while charging

Plug the power adapter into an electrical wall outlet, and then connect to the device to fully charge the battery before use (A full charge takes about 3 hours)

Turn the Device on

Press & hold the power button for 2 seconds

Wi-Fi Network Setup

Since many features require a Wi-Fi connection, it is recommended that you set up the Wi-Fi network before first use.

1. Tap → **Settings**.
2. Slide **Wi-Fi** switch to turn on.
3. The device automatically scans and lists all local Wi-Fi Networks found. A lock indicates secure **Wi-Fi** networks that require a password to connect.
4. Tap the desired network to which you want to connect ⇔ enter the **Network Password** if applicable ⇔ tap **Connect**.
5. Tap to return to the Desktop screen.

☆ ***If your Wi-Fi network is set as hidden****, it won't be found by the auto scan. Tap* ***Add Wi-Fi network*** *and follow the prompts to add your network.*

USB Functions

USB device mode options

Before using this feature please connect to PC via the Mini USB cable

USB debugging

USB debug mode is used to debug program for developers. ADB driver needs to be installed before using this mode, Installation method as follows：

（1）First switch on the device to **Install Driver** mode, And then find the "CD driver" (such as F:) on your PC，Use the resource manager to open the CD drive , then copy all files in the folder(\adb driver) to your PC;

（2）And then switch to **USB debugging** mode on the device, If the PC-side prompts to install the driver, select manual installation, and specify the drive path to the location where you saved the ADB driver.

Media Transfer Protocol (MTP)

Media transfer protocol (MTP) mode is used to automatically transfer media files to and from portable devices. If this is the first time using this mode on your PC, you need to install the driver. Installation method as follows：

First, switch to **Install Driver** mode on the device, then follow the prompts on the PC screen and reboot the system after the installation completes. (If not, please go to the Microsoft official website to download Media Player 11 upgrade package and install.）

Install Driver

Install driver mode is used to install the driver for USB debugging and media transfer protocol (MTP) mode, the media transfer protocol (MTP) mode driver is only required for Windows XP; Windows 7 supports by default.

☆ *You can also refer to the readme.txt in the "CD drive".*

3.7 Desktop

★ *Tap on any application icon to launch it.*
★ *Touch, hold and then slide icons to reposition then on the screen.*
★ *Touch, hold and slide icons onto "× Remove" to remove them from the* ***Desktop*** *screen.*

3.8 Screen Lock

Device can be set to have the screen locked automatically or manually by quickly pressing the power button. The system provides four lock screen styles for users. Enter **Settings** → **Security** → **Lock Screen** to switch.
The default screen lock mode is slide.

3.9 Pre-loaded Applications

	Clock	Display time and set alarm.
	Browser	Access the internet
	Calendar	Calendar functions
	Camera	Take photos, panoramic photos and video
	Calculator	Perform simple calculation

	Recorder	Recording and playback of audio
	Email	Send/Receive email using your existing email addresses
	File Browser	File manager application for viewing and managing files and apps. Use to install Android apps, and to backup files to your SD card
	My Music	Play and manage audio files
	Gallery	Play, Browse, or Manage Video and Photo files
	Screen Capture	Capture image of the current screen
	Downloads	View downloaded files and download progress
	Settings	Multiple settings for personalizing your Device
	GPS	GPS
	MAP	Map
	Wi-Fi	WI-FI
	Bluetooth	Bluetooth
	Voice search	Voice search
	Socialmatic	App allows full color printing of images immediately after capture.
	Hangouts	Multi-user video conference, contact & communicate with friends
	Acceleration Sensor	Measures the acceleration of the units
	Gmail	Google Mail Service
	Google	Google Search Engine
	Google Setting	Google App Setting
	Google Play	Google App Store

★ *To move an icon to the Desktop screen, touch & hold the icon, and then release it when it appears on the Desktop screen.*
★ *Touch, hold and then slide icons to reposition then on the screen.*
★ *Touch, hold and slide icons onto "× Remove" to remove them from the Desktop screen.*

3.10 Status and Notifications

On the **Desktop** screen, lapse top left corner display notification area, lapse top right corner display status area.

3.11 Application Management

Install Android Applications

☆ *Many interesting and free Android applications can be found on the web*

Purchased or free Android applications that you have downloaded to your computer may be installed quickly & easily on your SMTP01 using the **File Browser** or **task manager** application.

1. Copy the **.Apk** files that you want to install onto a SD card or USB device.
2. Insert or connect to your device
3. Tap the **File Browser** application icon.
4. Tap SD or USB and locate the folder in which the .Apk application files were saved.
5. Tap on an **.Apk** file → **Install**.
   The application is installed and the application icon is added to the Applications screen.
6. Tap **Open** to launch the application now, or tap **done** to return to the **File Browser** screen

Download Applications directly from websites

You can download Android applications directly from websites, and then quickly and easily install them on your device.

1. Tap the **browser** application icon to launch the internet.
2. Enter the desired website URL, and tap the **download** link for the application you want to install on your device.
3. After the download is completed, tap → **Downloads.** Open the applications from app list

Uninstalling Android Applications

You can also quickly and easily uninstall the Android applications.

1. Tap → **Settings** → **Apps** → **All**.
2. Tap the application you want to uninstall → **Uninstall**.
3. Tap **OK** to confirm the Uninstall.

3.12 Clock

Tap the **Clock** application icon. Time / date, Alarm, Countdown and Stopwatch are displayed

Alarm

You can use your device as an alarm clock and to set multiple alarms.

Add Alarm

1. Tap to set alarm → **Press** to add an alarm.
2. Set up your alarm as desired.
3. Tap **OK.**
4. Toggle on/off switch to enable.

Shut Off Alarm Alert

When a scheduled alarm is activated, a pop-up window with the alarm title appears.

Drop **to** cancel the alert.

Drop **to** to snooze for 10 minutes.

Turn Alarm on

1. In the Alarm list, find the desired alarm.
2. Toggle the switch button from OFF to ON.

Edit Alarm

1. Enter the alarm list, click the alarm time to edit.
2. After editing, tap **OK.**

Delete Alarm

1. Enter the alarm list, drag left or right to delete the alarm you want to delete

Countdown

Add countdown

1. Tap **Count down** icon to enter the countdown interface.
2. Set a time, then tap **Start.**

☆ *If user has set a countdown， tap below the interface to continue to add a new countdown.*

Edit countdown

1. Tap +1M to add one minute countdown time.
2. Tap **Stop** to pause countdown.
3. After paused，tap to reset countdown.
4. Tap to add tags to the countdown.

Delete countdown

In countdown interface，tap to delete the corresponding countdown

Stopwatch

Start stopwatch

1. Tap **Stopwatch** icon to enter the stopwatch interface.
2. Tap **Start** to start the stopwatch.

Pause / Restart stopwatch

1. While the stopwatch is running，tap **Stop** to pause.
2. When paused，tap to reset stopwatch

Lap times

While running the stopwatch，tap to record the lap times.

Share timing results

After paused，tap to share the results on Google or through Gmail.

3.13 Internet Browser

Users can connect to the Internet through browser.

Click the browser icon on the Desktop to open the Web browser.

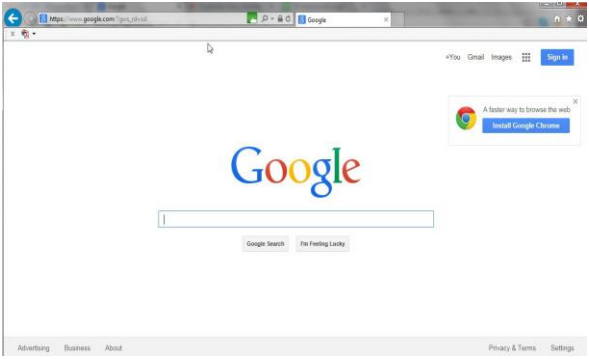

3.14 Calendar

Tap the **Calendar** application icon.
For the first use of the **Calendar**, you will need to add an Exchange account. Enter account email address and password. Enter the system **Settings** → **Account & sync** →**Add account**, then follow prompts

Add Event

1. On the **Calendar** screen, tap on the date to which you want to add an event.
2. Tap on the event time → tap **.**
3. In each field, enter the details of the related activities.
4. Tap **Done**.
   Click the date in the upper left to choose the calendar you want, such as DAY, WEEK, MONTH and AGENDA display mode.

☆ *Dates with gray bars indicate scheduled events.*

3.15 Camera

Tap the Camera application icon to start

Take Pictures

1. Tap switch to video, and you can take picture.
2. Tap take picture.
3. Pictures are saved to the gallery.
4. Slide the screen from right to enter the gallery and browse through pictures.
5. Press **Back** to the **Camera**.

6. Tap to exit the **Camera** and back to the **Desktop**

Take Videos

1. Tap switch to video, and you can take videos.
2. Tap to begin and tap to stop.
3. Videos are saved to the gallery.
4. Slide the screen from right to left to enter the preview list.
5. Press **Back** to the **Camera**.
6. Tap to exit the **Camera** and back to the **Desktop**.

   ★*During video recording, you can click the frame quickly to take pictures. Quick shot function does not terminate the video recording*

Single-motion Panorama

For capturing larger scenes, tap icon and switch to single-motion panorama mode. In this mode, the user starts an exposure and then slowly turns the Camera to encompass as wide a perspective as needed. The Camera assembles the full range of continuous imagery into a single panoramic photo.

You can press Viewfinder long, or on the top right screen tap , tap button to switch between the front and back cameras, then tap , enter camera settings menu, In the dialog box, click select storage device , to choose the files are stored in the Local, SD card or USB storage.

3.16 Photo Capture Button

1. Hold the photo capture button for 5 seconds, to enter into the photo mode
2. Watch the LCD display
3. Press the photo capture button
4. Click to exit the camera and return to the desktop

3.17 Calculator

1. Tap the Calculator application icon.
2. Tap the numbers and sign of operation to perform the calculation.
3. Tap **CLEAR** to clear the result one by one, tap and hold **CLEAR** to clear all.

3.18 Recording

1. Tap the recorder icon
2. Tap the record icon to start recording
3. Tap the record icon to stop record
4. Tap the play button to play the recording

Settings

Tap the recorder icon. Click Settings

1. Select the recording quality.
2. Select the recording time.
3. The default recording file name.
4. Select the default storage devices.
5. About.

3.19 EMAIL

☆ *POP3, SMTP and Exchange accounts are supported*

Add Email accounts

You can enter one or more personal email addresses that you would like to access through your SMTP01

1. Tap the **Email** application icon.
2. On the **Account setup** screen, Tap in the **Email address** entry field → enter your email address.
3. Tap in the **Password** entry field → enter your email password.
4. Tap **Next**.
5. **Manual Setup** *(optional)*: The server settings are automatically populated based on your email account provider *(i.e., gmail.com, etc.)*. However, if you need to change the server settings tap **Manual Setup** and make necessary changes.
6. According to the selected mailbox server, enter or select the parameter and server type, and then tap **Next**.
7. Optional: Enter a name for the account.
8. Enter name for outgoing message → tap Done.

☆ *After setup, if you are unable to connect to a free email account, check with your email provider to make sure their servers support free accounts on Post Office Protocol (POP) or Simple Mail Transfer Protocol (SMTP)*

Email Inbox

1. Tap the **Email** application icon.
2. If you set up only one email account, it opens immediately. If you set up multiple accounts, they are listed in the **Accounts** screen.
3. Tap on the desired email account → tap **Inbox**

Open Email Message

1. On the **Inbox** screen, tap on an email to open it.
2. For attachments, tap **Open** to launch appropriate application, or tap **Save** to save attachment to a SD card.
3. To replay, tap **Reply** or **Reply all**.

a. Tap in the Compose Mail entry field to enter your reply message.

b. Tap Send to send immediately, Save as draft to save without send or Discard to discard without saving or sending.

4. To delete the email immediately, tap **Delete**

Compose New Email Message

1. On the **Inbox** screen, tap .
2. Enter the e-mail address in the recipient field. If you want to add Cc or Bcc recipients, tap + CC/BCC , and then enter the recipient email address.
3. Tap in the **Subject** entry field to enter your desired subject title.
4. Tap in the **Compose email** area to enter your personal message.
5. If desired, tap to attach a file.
6. When ready to send the email, tap SEND

Edit Email Accounts

1. Tap the **Email** application icon.
2. On the **Inbox** screen, tap → **settings**.
3. Set your desired preferences to customize your email account.
4. Tap to return to the **Inbox** screen

Delete Email Accounts

★ *If you have multiple accounts, and you delete the account designated as the default account, the next email listed is automatically set as the default.*

1. Tap the **Email** application icon.
2. On the **Inbox** screen, tap → **Settings**.
3. Click the account you want to delete.
4. In the pop-up **Account options** window, tap **Delete**
5. Tap **OK** to confirm the deletion

Set Default Email Account

You must always have one account designated as the default account, so if you have multiple email accounts, you can select any one as the default.

1. Tap the **Email** application icon.
2. On the **Inbox** screen, tap → **Settings**.
3. Tap the desire account.
4. In the right settings list, tap **Default Account** to select it.

3.20 File browser

Tap the **File Browser** application icon to view the files on all storage devices *(Internal memory, SD card, USB device)*, and to quickly & easily install Android application on your Tablet. Use the icons across the top of the screen as follows:

Local	Internal Flash (Local)	SD	SD Card
USB	USB Storage		Paste
	Back to the previous folder		Switch folder display mode.
	Menu		

Copy Media between Computer and SMTP01

You can use the File Browser to copy files between an external storage device and your computer. You can first copy the desired files onto a SD card or USB device

☆ *The internal device storage is titled "Local", a memory card "SD", and a USB storage device is titled "USB".*

☆ *The instructions below are for copying from a SD card or USB storage device into the device. You can use the same method to copy from the device to a SD card or USB storage device, and then connect the storage device to your computer to transfer the files into the desired folder on your computer.*

1. Tap **GoTo**, select SD or USB to display the contents of your storage device.
2. Tap and hold a folder/file and enter into the multi-select mode, select the folder / file as desire → tap **Copy**.

   Tap **GoTo**, select Local Internal Memory → tap on the folder into which you want to copy the file → tap

Delete Files

Tap and hold a folder/file and enter into the multi-select mode, **select the folder/file desired** → **tap Delete** → **OK** to confirm the deletion.

3.21 Gallery

Switch the storage area to be viewed

In the root directory, on the top left click the **Local / SD** or **U Disk** to switch the view storage area

Classification of photos and videos list

In the root directory, on the top left click the **Albums**, **Locations, Times, People, or Tags** classify the photos and videos. In the classification file folder, on the top left click **Filmstrip view** or **Grid view** to switch the view display mode.

View / play photos and videos

Photo

In the classification folder, click on the photo thumbnails to open the photo, and on the top right of the folder interface tap →**Slideshow** to playing slide.

Video

Under the classification folder, click on the view preview. Enter to the video preview interface, and click the play button in the video preview to play the video.

The operation with picture or video playback

DLNA

In preview photo interface（or video playback interface）on the top right click follow the prompt to operate，you can easily share the tablet picture (or video) to support DLNA TV broadcast.

Playback of the video floating window

In video playback, on the top right click to switch to playback of the video floating window.

Delete Photos and Videos on the device

On the top right of the screen, **Tap icon →Tap select album or Select item**. Select the album image thumbnails or video preview which you want to delete, tap →**OK**. If you want to delete a single picture (or video), enter the folder, select the picture (or video), tap , or delete it in the image thumbnails (or video preview) , tap → **Delete**.

Print photos from the Gallery

In the classification folder, click on the photo thumbnails to open the photo, and on the top right of the folder interface tap →click **Print**.

3.22 Screen Capture

You may capture a screen image by tapping at any time.

Tap the **Screen Capture** application icon to set options for a screen capture.

- Select a delay timer to capture the screen (seconds).
- Select the default storage device.
- Show screen capture icon in status bar.
- About.

After the images are saved, they can be viewed through **Gallery** application.

3.23 Wi-Fi

Tap **Settings** → **Wi-Fi, to** enter into Wi-Fi settings

1) Slide the Wi-Fi switch to turn on Wi-Fi
2) All APs in the vicinity will be listed, click to select the name you want to connect to
3) Previously connected AP information will be shown in a pop up window, select "Connect" to use the information or "Forget" to remove it
4) If the AP is not encrypted, select "connect" in the pop-up window
5) If the AP is encrypted, enter the password in the pop-up window, then select "Connect"
6) When connected successfully, the wireless connection icon in the top status bar appears

3.24 GPS

The device built-in GPS module, Users do need not external an GPS receiver.

3.25 Settings

Wireless & Internet	**Open the Wi-Fi, set up and manage the wireless access point.**
	Open the Bluetooth and connect a Bluetooth device
	Airplane Mode

Function	**Sound**	**Volume**	Set volume
		Default Sound	Set the default notification ringtone
		Touch Sound	Turn on or off the Warning Tone
		Screen Lock Sound	Turn on or off Lock Screen
		Volume Icon	Turn on or off the Volume icon in the status bar
	Display	**Brightness**	Adjust the screen brightness
		Wallpaper	Set the wallpaper
		Sleep	Set the device sleep time
		Screen Saver	Set the interactive Screen saver
		The font size	Set the font size
		Wireless display	
		Auto-Rotate	Set auto-rotation of screen On / Off
	Storage		Select the default storage devices to read and write, check the internal storage, viewing, unload and format the SD card and USB memory store information.
	Battery		Check the battery using record
	Application		Install and uninstall the application.
Personal	**Location**	**Allow Access**	Allowed application access to location information
		GPS Positioning	Allow application access to your GPS position
		Wi-Fi location info	Allow Google services access for faster performance
	Security	**Screen lock**	
		Owner Info	
		Password setting	Require pin or password to access the device – Y/N
		Display Password	
		Device Manager	Check or stop using the device manager
		Unknown Source	Allow App installation from unknown sources.
		Verified Apps	Application of banned installation may cause damage, or warning before installation.
		Trusted credential	Display a trusted CA certificate
		Install From SD	Install certificate from the SD card
		Remove credential	Delete all certificates
	Language and Input Method	**Language**	Set the system language.
			Spell check tool, personal dictionary, keyboard and input method, a pointer speed.
	Backup and Reset	**Backup Data**	The application data, Wi-Fi passwords and other Settings are backed up to Google servers.
		Backup Account	Backup to the only debug private cache
		Auto recovery	After installing an application, the system will restore backup Settings and data.
		Restore Factory Settings	Remove all the data on the device

Account	**Add account**		
	Date & Time	**Auto Date & Time**	Use the network time
		Auto Time Zone	Automatically determine the time zone
		Set Date	Set date
		Set Time	Set time
		Set Time Zone	Set time zone
		Set Time Format	Set time format to 24H or 12H
		Set Date Format	Set Date format
	Other Functions		Talkback, Zoom gestures, large fonts, say the password, auxiliary function shortcut, touch and hold the delay, enhance web auxiliary functions.
	Developer Options		Submit bug reports, desktop backup password, unlock screen, the SD card read and write protection, super user Settings, USB debugging, and power button menu error reporting, allow the simulation location, select debug, waiting for the debugger, USB authentication application, display touch, the cursor position, display layout boundary, the GPU view update, update display hardware layer, display GPU excessive drawing, surface update, transition animation window ,program length adjustment, stop using HW overlay, forced to GPU rendering, forced 4xMASS, simulated the auxiliary display device, enable the strict mode, the CPU usage, GPU rendering mode analysis, enable OpenGL tracking, turn on the tracking, keep no activity, background process limits, display "application not responding" (ANR).
	Adjust CPU performance		Adjust the CPU performance
	About Device		System upgrade , Status messages, legal information, At the next boot startup guide , model, Android version, baseband version, kernel version, the version number.

3.26 System Reset

Do not reset the unit or shut off power while printing!

3.27 SocialMatic Apk

The Apk has 3 major functions: Photo Editing, Printing and Sharing

1. Photo Editing:

a) Click -> enter the camera mode.

b) Click to start editing after taking photo.

c) Click to insert emote

2. Photo Printing:

a) After photo had being edited, click to enter printing mode.
b) Click the "OK" button to print the photo in the pop-up preview window.
c) Click cancel to terminate printing

3. Photo Sharing:

a) After editing photo, click to enter the sharing screen.
b) Click "next" to upload the photo to "SocialMatic.

Important notes

☆ store media paper in cool dry locations

☆ do not expose the paper to high temperature / high humidity conditions (e.g.; car, beach, etc. For extended periods

☆ if paper is subjected to high or low temperatures, return to normal conditions for one hour before printing

☆ do not touch or pull the paper while printing

☆ do not bend or scratch photos, and avoid touching the print side.

Do not shut off the camera power while printing.
Do not open the paper tray door while printing

Frequently asked questions:

Android

Q: What Android OS version is on my Device?

A: 4.4.2

Basic Device Functionary

Q: Do I have to charge the battery before use?

A: You should charge the battery for at least **2** hours in the off status, the device may be used while charging, but this charging method is not recommended.

Email

Q: Can I use any of my personal email addresses to send/receive email?

A: The device supports POP3 and SMTP accounts. Some free email accounts are not supported on mobile devices. Check with your email provider to see if your account is supported.

Storage Cards

Q: Which storage cards are compatible with my Device?

A: T-FLASH card.

Music

Q: What type of music files can I play on my device?

A: MP3, WMA, APE, FLAC, AAC, OGG, AC3, WAV

Q: How do I add music files to my device?

A: Copy the music files from your computer onto a SD card or USB storage device, and then use the File Browser application to copy the files into the device.

Photos

Q: What type of photo files can I view on my device?

A: JPEG, BMP, GIF, PNG, TIFF

Q: How do I add photo files to my device?

A: Copy the photo files from your computer onto a SD card or USB storage device, and then use the File Browser application to copy the files into the device.

Video

Q: What type of video files can I play on my device?

A: Video file formats supported: MKV, MPEG, MPG, MP4, AVI, DiVX4/5/6, XVID, RMVB, VOB, DAT, and WMV. The largest video format is supported 1080P (1920×1080) resolution.

Q: How do I add video files to my device?

A: Copy the video files from your computer onto a SD card or USB storage device, and then use the File Browser application to copy the files into the device.

Wi-Fi

Q: Do I need a Wi-Fi adapter to connect to the Internet?

A: No. The Wi-Fi adapter is built-in to the device.

Battery management

1) The battery is not fully charged out of the box, so it is recommended that you charge the battery for at least **2** hours before you start to use the device
2) Avoid using battery in cold environment, because of the low temperature will shorten the battery life, and reduce the camera / printing performance
3) The camera may become hot after long term continuous use. This is normal, it is not a failure ⇔ thermal printing generates a lot of heat…simply allow the unit to cool down!
4) If the battery in the fully charged state is stored for a long time, its performance may decline
5) Do not short the battery terminals

6) The rechargeable battery is designed and manufactured to be used and recharged frequently.

As with all batteries, the capacity of the battery declines each time it is charged/depleted. To prolong the battery's life, follow the suggestions below:

- Use your SMTP01 at least once a week
- Charge the battery regularly and fully
- never leave the battery fully discharged for a long period of time
- Always keep the device and the battery away from heat (+40℃)

Charge battery

Plug the power adapter into an electrical wall outlet, and then connect to the device to fully charge the battery before use (A full charge takes about 3 hours in the off status)

When fully charged, the battery icon displays as
A fully discharged battery takes approximately 3 hours to fully charge in the off status, but the device may be used while plugged if desired.

Important Safety Precautions

Always follow these basic safety precautions when using your SMTP01. This reduces the risk of fire, electric shock, and injury.

- Do not expose this product to rain or moisture
- Keep the device out of direct sunlight and heat sources
- It is recommended that users use the print function in an external environment that does not exceed 30° C. When the external environment exceeds 45° C, printing will be prohibited.
- Protect the power cord. Route power cords so that they are not likely to be walked on or pinched by items placed on or against them. Pay particular attention to the point where the cord attaches to the device
- Only use the AC adapter included with the device. Using any other power adapter voids your warranty
- Do not remove the cover. There are no user-serviceable parts inside
- Do not plug HDMI when using Camera
- Do not look directly into flash from close range as this may result in visual impairment
- Do not abuse the LCD display which could result in internal LCD screen glass damage and/or leakage. If liquid crystal material gets into eyes, use copious amounts of water to flush eyes immediately and seek medical attention
- The SMTP01 camera is a high precision device. Please do not drop, knock, or press heavily as this is likely to damage the camera.
- Do not wrap the camera in the clothing, blankets or anything else which may inhibit heat loss. Excessive heat may cause distortion of the shell, and may cause personal injury. Please use the camera in a well-ventilated environment.
- Do not place the camera in locations which may be subject to high temperatures as this may result in product damage and/or poor performance. Before moving the camera, disconnect all lines and cables. Failure to do so may

result in damage to the power lines or cables, and cause personal injury or damage to the product.

- **FCC Statement**
  This equipment has been tested and found to comply with the limits for a Class B digital device, pursuant to part 15 of the FCC rules. These limits are designed to provide reasonable protection against harmful interference in a residential installation. This equipment generates, uses and can radiate radio frequency energy and, if not installed in accordance with the instructions, may cause harmful interference to radio communications. However, there is no guarantee that interference will not occur in a particular installation. If this equipment does cause harmful interference to radio or television reception, which can be determined by turning the equipment off and on, the user is encouraged to try to correct the interference by one or more of the following measures:
  a) Reorient or relocate the receiving antenna
  b) Increase the separation between the equipment and receiver
  c) Connect the equipment into an outlet on a different circuit from that to which the receiver is connected
  d) Consult the dealer or an experienced radio/TV technician for help
- **FCC Radiation Exposure Statement**
  This device complies with FCC SAR exposure limits set forth for an uncontrolled environment. SAR compliance for using the equipment in close proximity to the human body has been evaluated at 5mm.
  This device complies with Part 15 of the FCC rules. Operation is subject to the following two conditions: (1) this device may not cause harmful interference, and (2) this device must accept any interference received, including interference that may cause undesired operation.
- **Caution:**
  Any changes or modifications not expressly approved by the party responsible for compliance could void the user's authority to operate the equipment.

Cleaning your device

Treat the screen gently. To clean fingerprints or dust from the screen, we recommend using a soft, non-abrasive cloth such as a camera lens cloth.